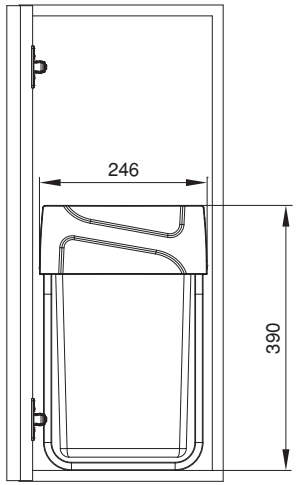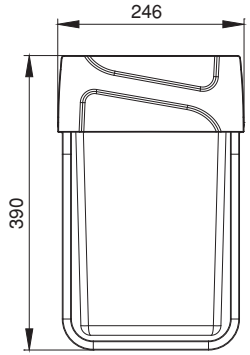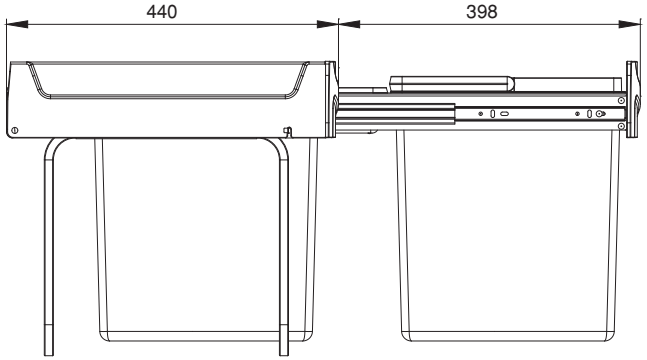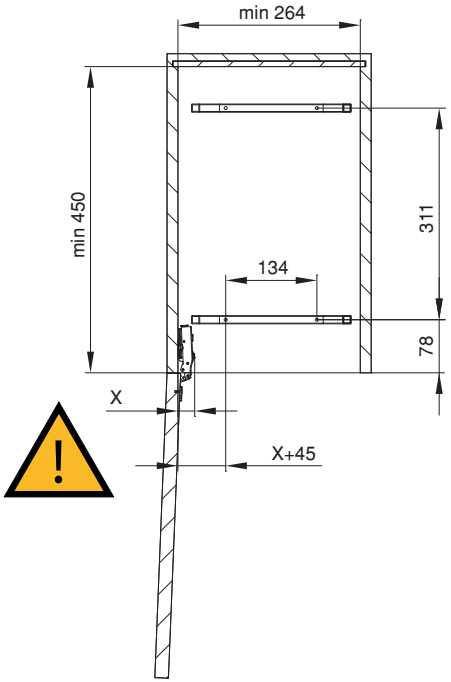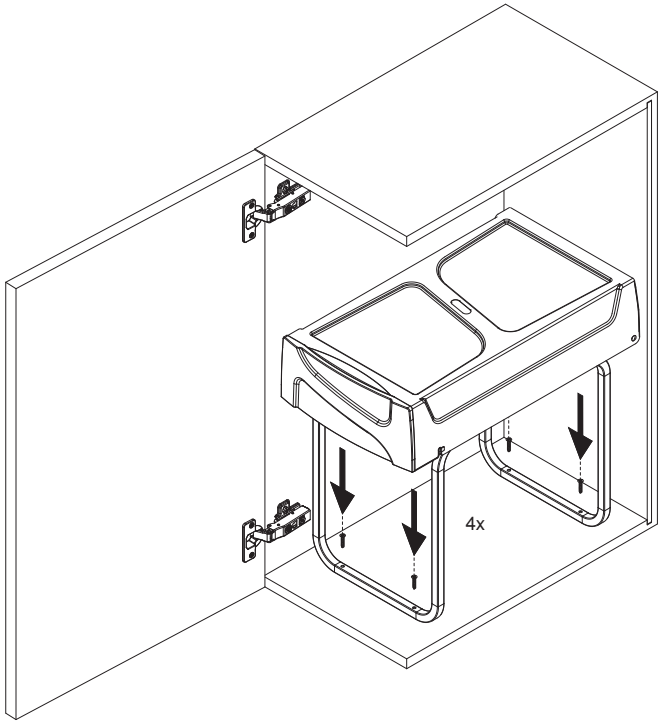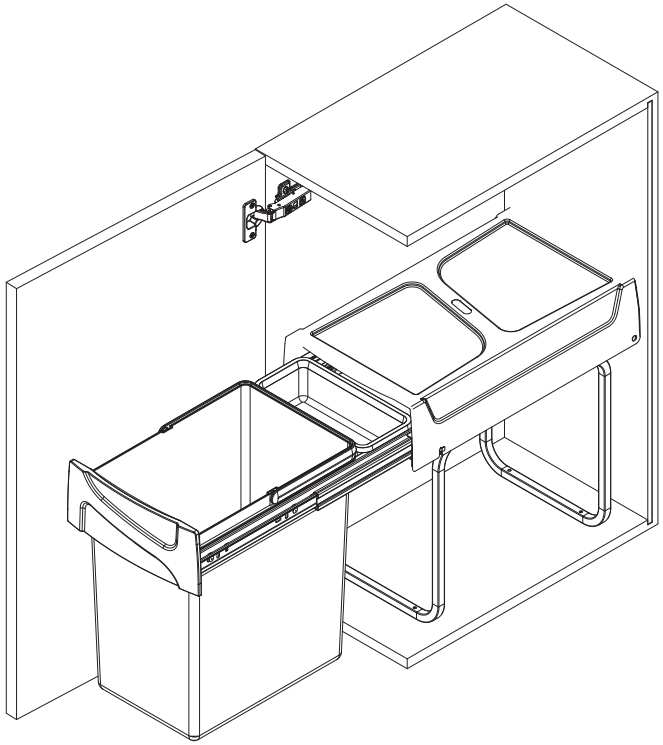RECYCLE 20 L